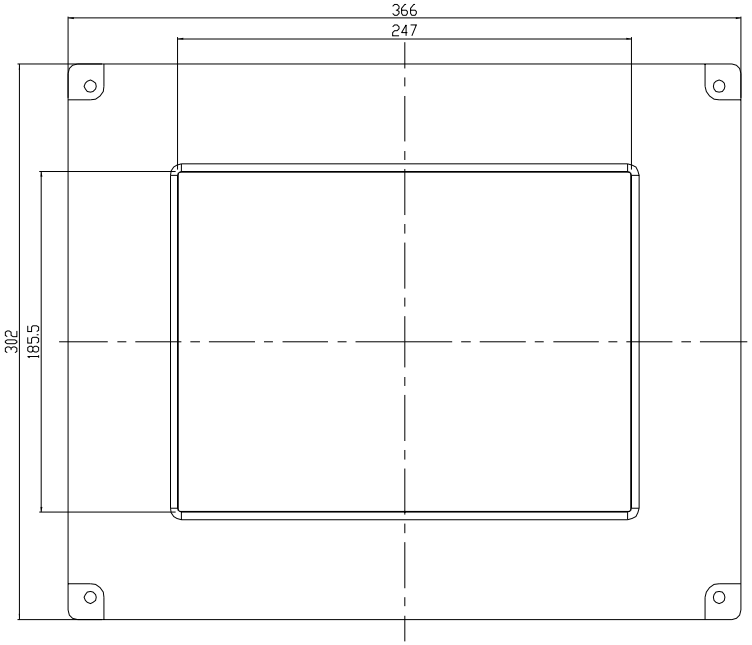

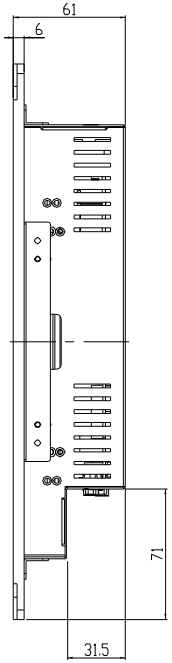

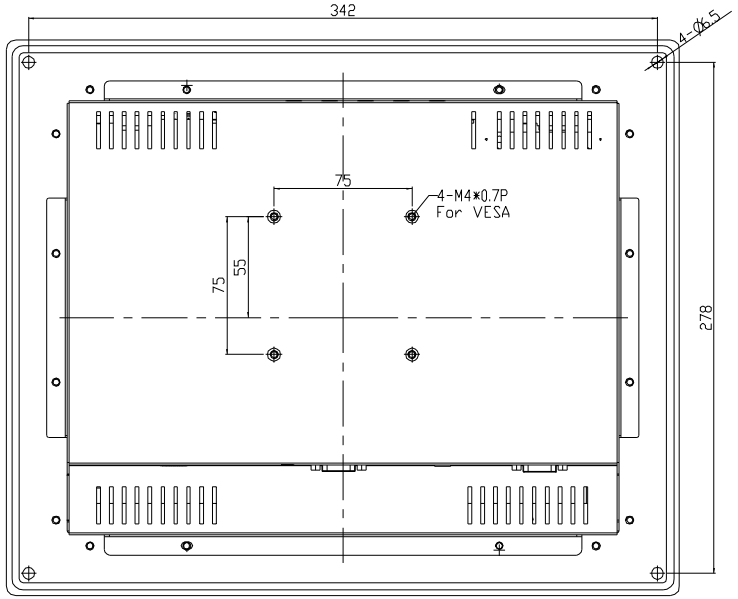

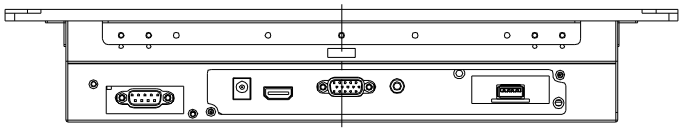

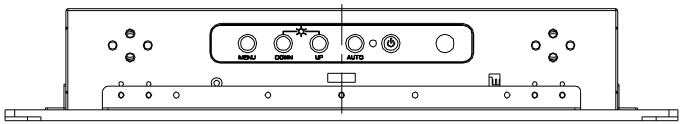

TOP VIEW

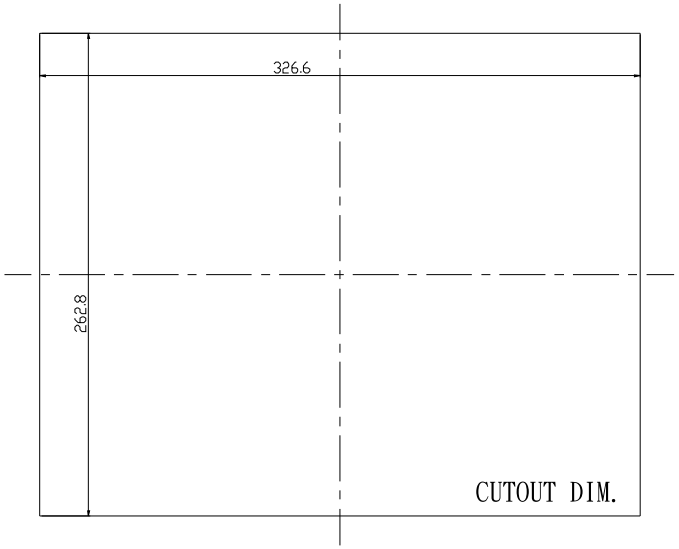

CUTOUT DIM.

AD/BOARD		MODEL							
INVERTER									
KEY PAD									
PANEL:	VERSION				PART NAME	ASSEMBLY		SCALE	1.000
	V1	MATERIAL	METAL	DATE	2014-Jun-24	APPROVED		DRAWN Chris	UNIT MM