mm [inch]

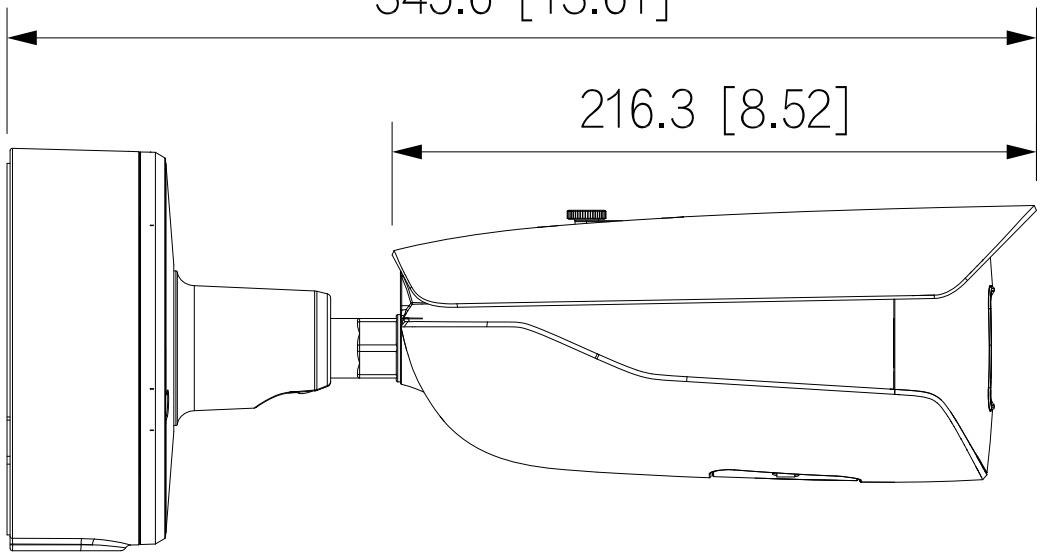
345.6 [13.61]
216.3 [8.52]

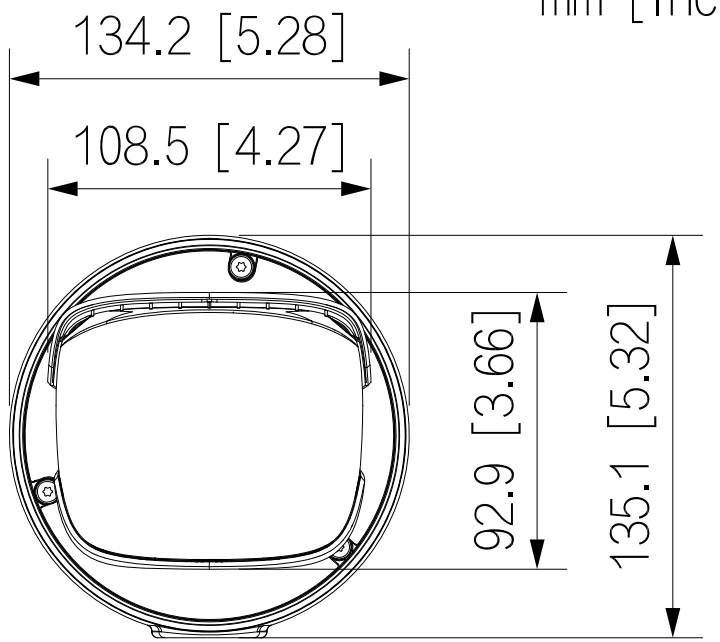
134.2 [5.28]
108.5 [4.27]
92.9 [3.66]
135.1 [5.32]

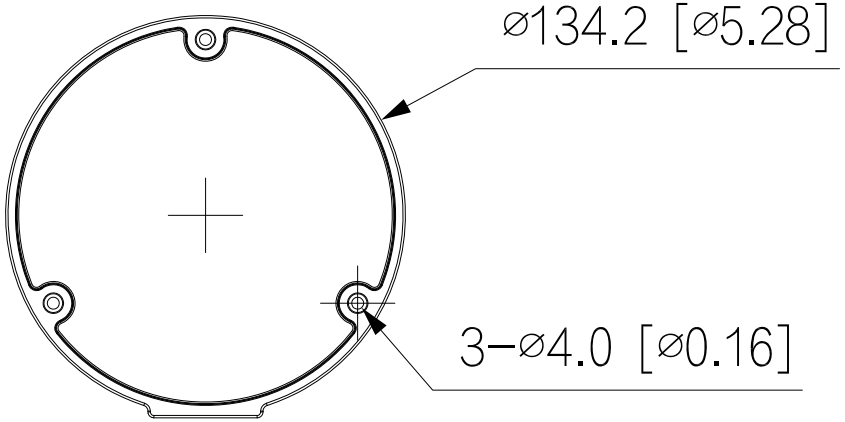
⌀134.2 [⌀5.28]
3−⌀4.0 [⌀0.16]