mm [inch]

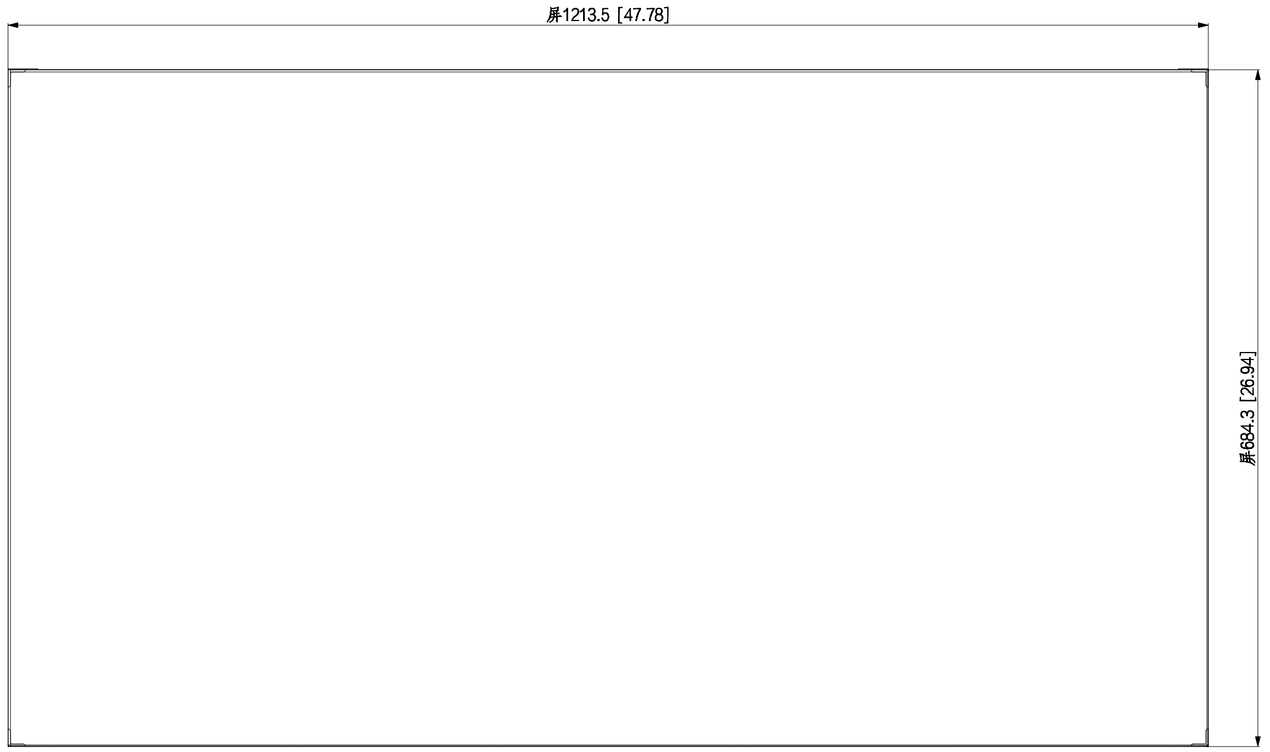
屏1213.5 [47.78]
屏684.3 [26.94]

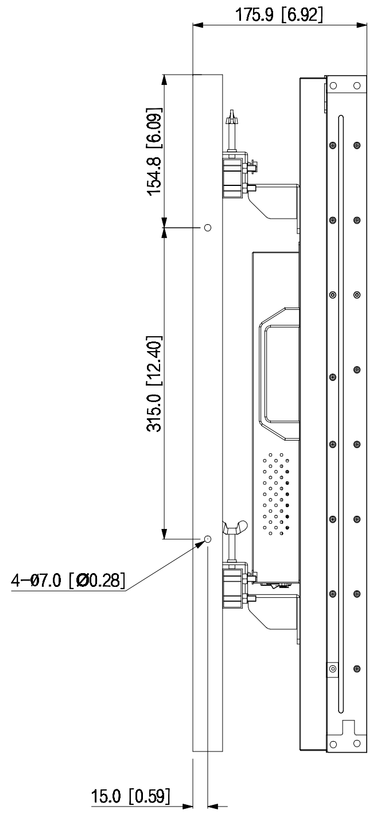
175.9 [6.92]
154.8 [6.09]
315.0 [12.40]
4-Ø7.0 [Ø0.28]
15.0 [0.59]

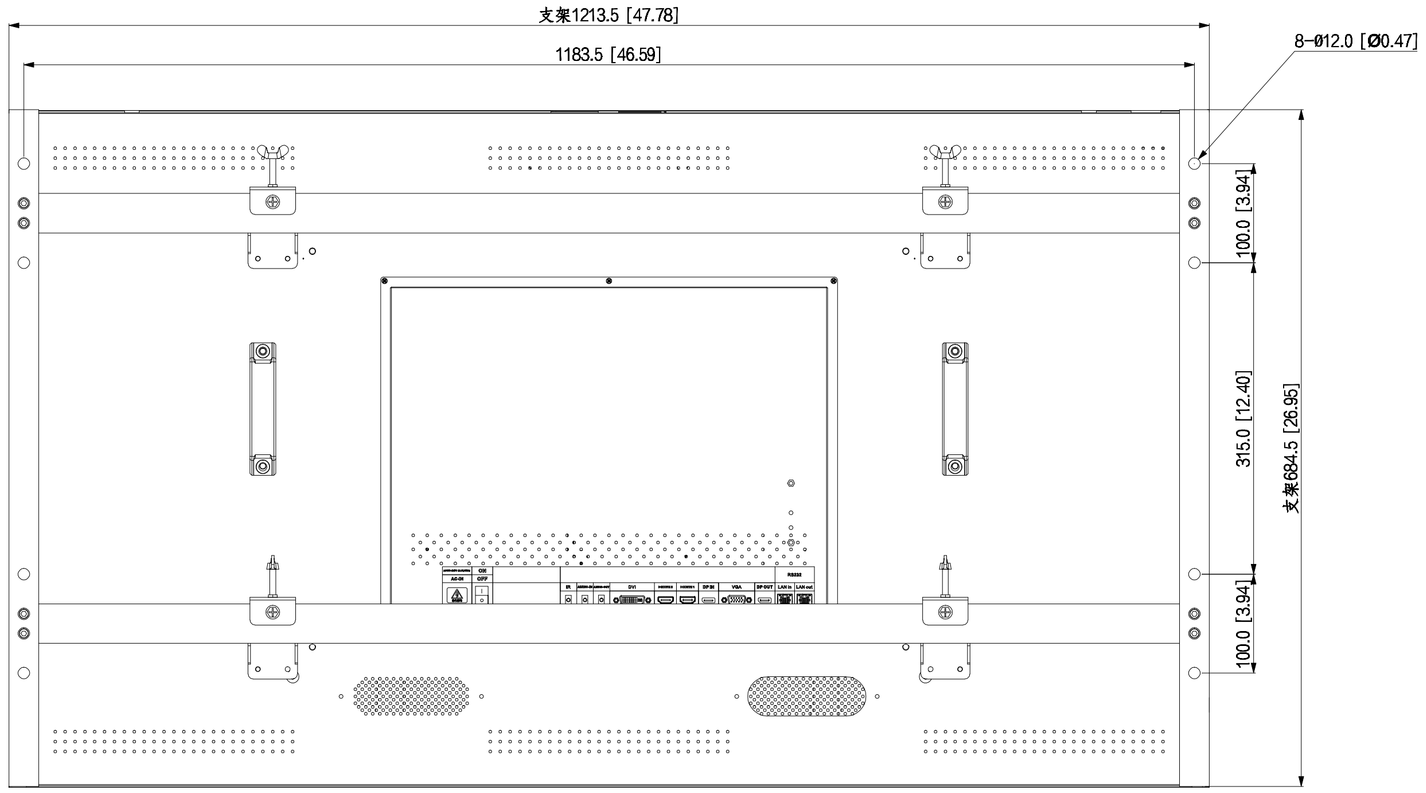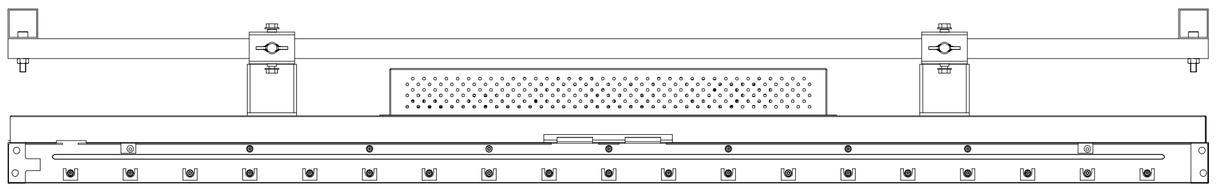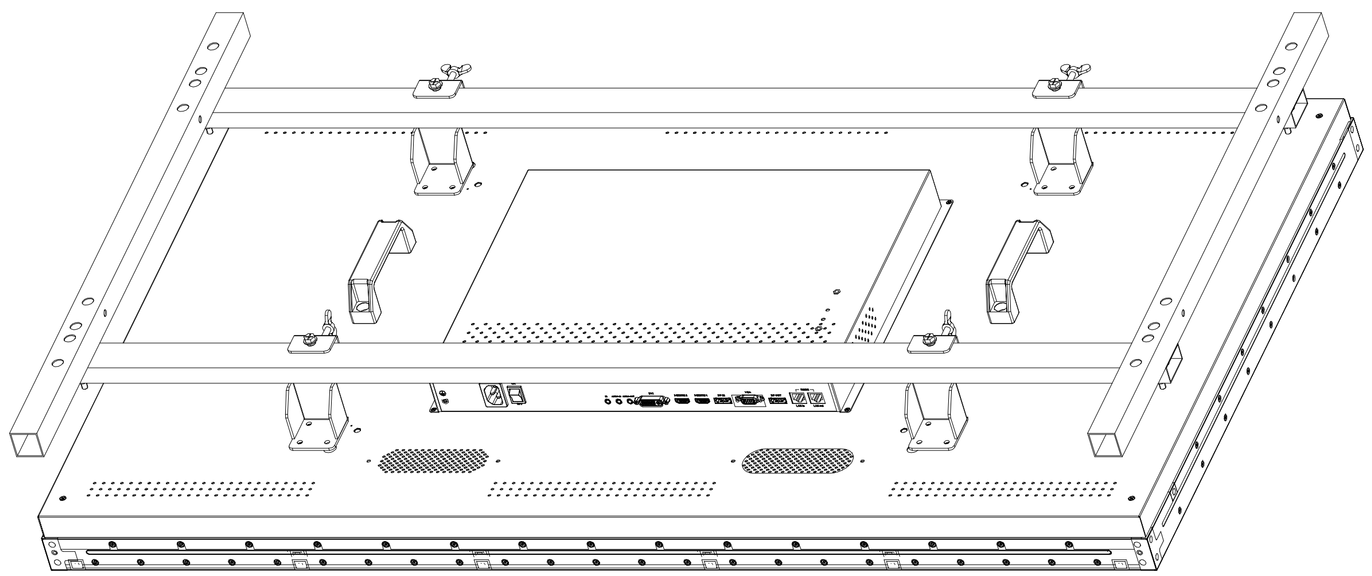
支架1213.5 [47.78]
1183.5 [46.59]
8-Ø12.0 [Ø0.47]
100.0 [3.94]
315.0 [12.40]
支架684.5 [26.95]
100.0 [3.94]