mm [inch]

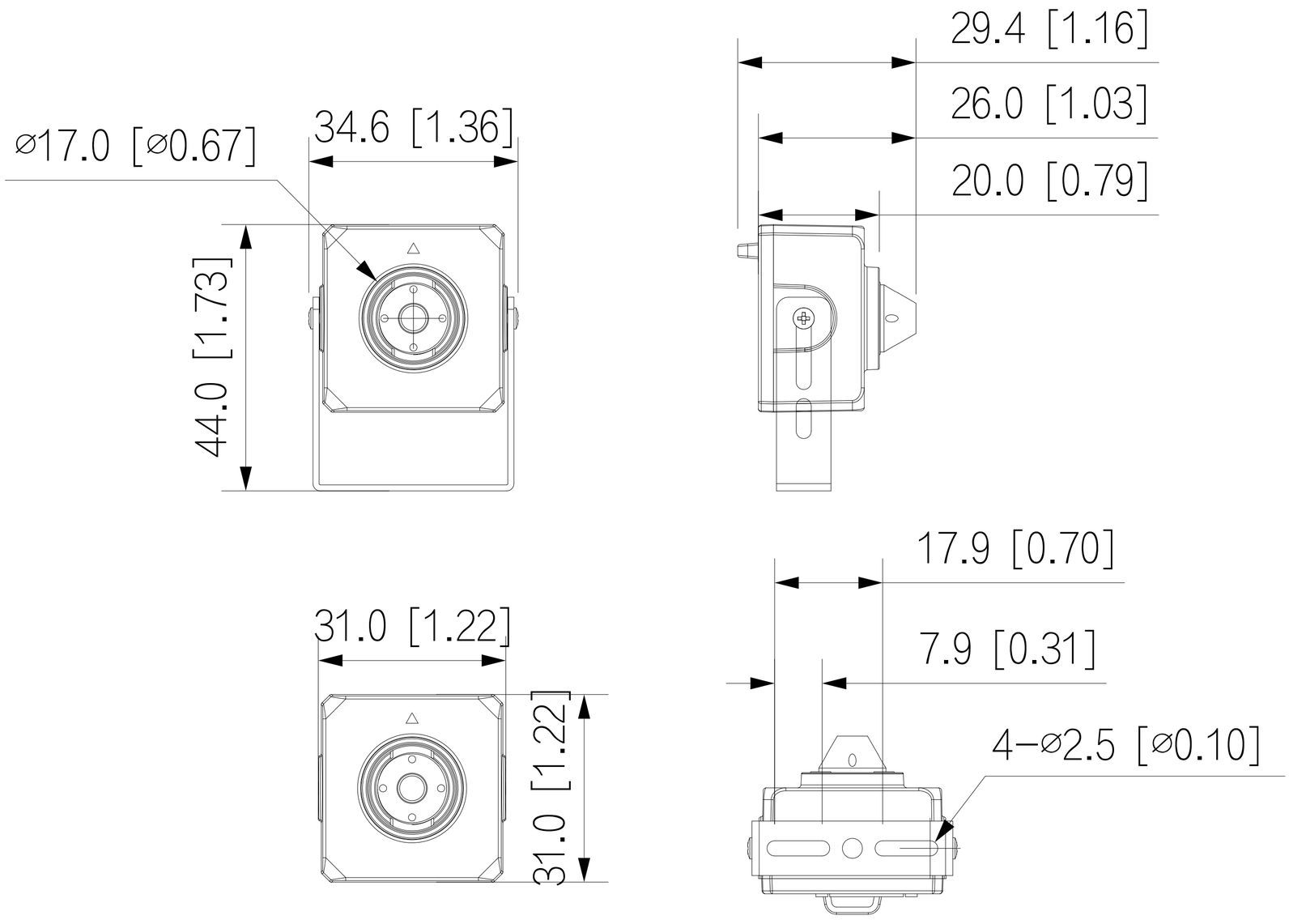
29.4 [1.16]
26.0 [1.03]
20.0 [0.79]
⌀17.0 [⌀0.67]
34.6 [1.36]
44.0 [1.73]
17.9 [0.70]
7.9 [0.31]
4−⌀2.5 [⌀0.10]
31.0 [1.22]
31.0 [1.22]